WHALENADO
HVLS FANS

INSTALLATION GUIDE

15 Year Warranty Documents Included

1(844)286-NADO
info@whalenado.com
www.whalenado.com

Fan Components

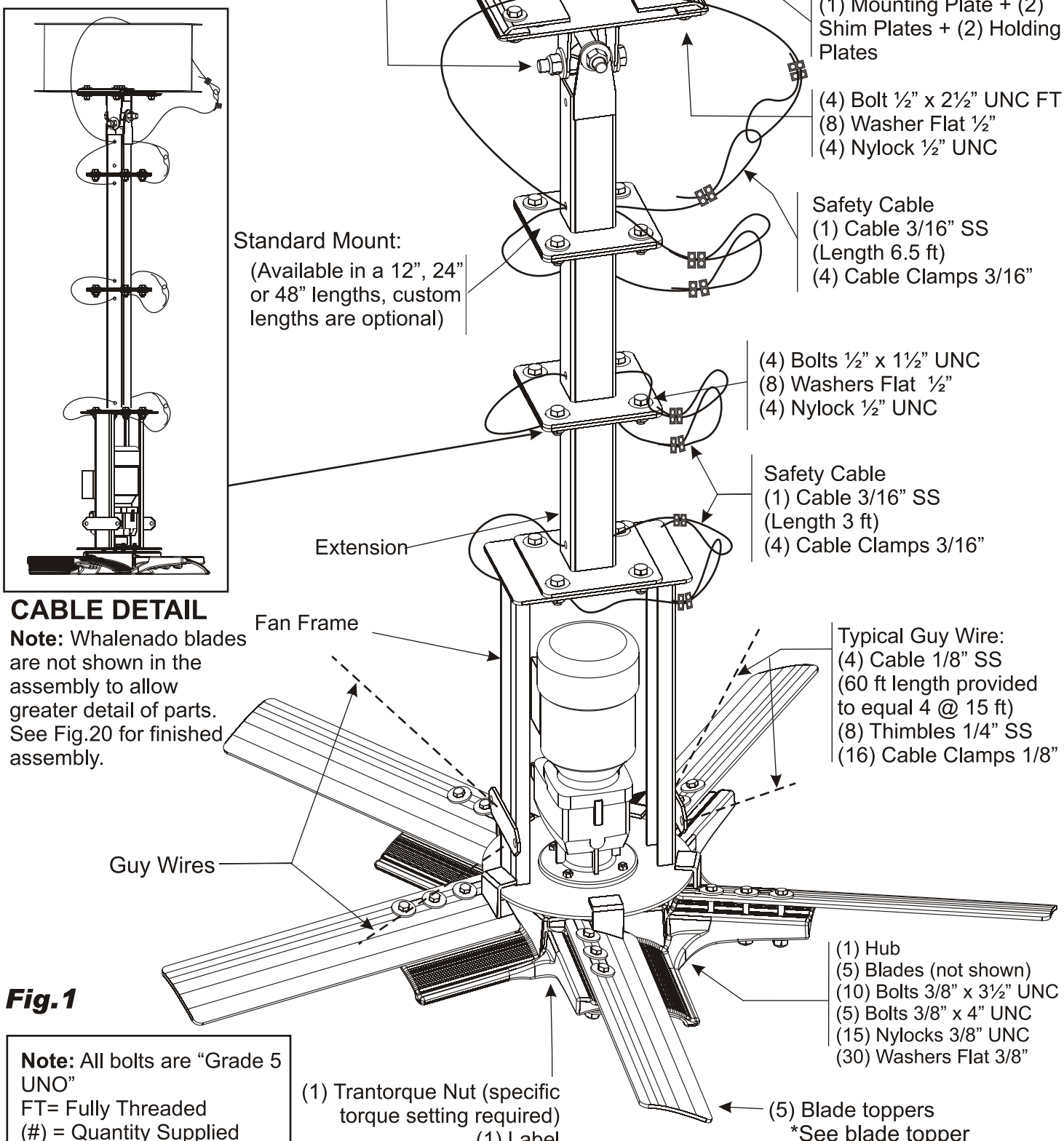

CABLE DETAIL

Note: Whalenado blades are not shown in the assembly to allow greater detail of parts. See Fig.20 for finished assembly.

Fig.1

Note: All bolts are "Grade 5 UNO"
FT= Fully Threaded
(#) = Quantity Supplied

Index

1/ Tools required to install product.....Pg.4

2/ Required steps before installation.....Pg.4

3/ Different Mounting Applications.....Pg.5
- "I" Beam *(Fig.2)*
- OWSJ *(Fig.3)*
- Wood Beam *(Fig.4)*
- Concrete Beam *(Fig.5)*
- Purlin "Z" Mount *(Fig.6)*
- Purlin Mounting Details
- OWSJ Mounting Details

4/ Standard Mount.....Pg.8
- What is included in the mount package
- What standard mounts are available
- How to install the standard mount *(Fig.8)*
- Typical cable clamp installation *(Fig.9)*

5/ Extensions.....Pg.9
- What is included in the extension package
- What extensions are available *(Fig.10)*
- How to install the extensions *(Fig.11)*

6/ Main Hub and Drive Assembly.....Pg.10
- What is included in the main hub and drive assembly
- How to install the assembly *(Fig.13)*
- Installing the safety cables *(Fig.13) (Fig.9)*

7/ Guy Wires.....Pg.11
- What is included in the guy wires
- How to install the guy wires *(Fig.9) (Fig.14) (Fig.15) (Fig.16) (Fig.17)*
- **Important leveling instructions**

8/ Blade Assembly.....Pg.12
- What is included with the blades
- How to install the blades *(Fig.18)*

9/ Leveling.....Pg.13
- **Important leveling instructions**
- Complete Assembly *(Fig.19)*

Itemized Checklist.....Pg.14

Maintenance Schedule.....Pg.15

Safety Precautions.....Pg.16

Clearance Requirements.....Pg.17

Recommended Maintenance Checklist.....Pg.18

Limitation of Warranty and Liability.....Pg.19

1/ Tools Required to Install Product

- Level
- Cable cutters (for stainless steel aircraft cable)
- Ratchet or impact gun
- Basic imperial socket set up to 3/4”
- Basic imperial wrench set
- Lifting device or scaffolding

CAUTION

THIS UNIT HAS AN UNGUARDED IMPELLER. DO NOT USE IN LOCATIONS READILY ACCESSIBLE TO PEOPLE OR ANIMALS.

TO REDUCE THE RISK OF INJURY TO PERSONS, INSTALL FAN SO THAT THE BLADE IS AT LEAST 3.05 METERS (10 FEET) ABOVE THE FLOOR.

2/ Required Steps Before Installation

WARNING

SUPPORT DIRECTLY FROM BUILDING STRUCTURE

CAUTION

MOUNT WITH THE LOWEST MOVING PARTS AT LEAST 3.05 METERS (10 FEET) ABOVE FLOOR OR GRADE LEVEL.

- We recommend two experts to perform installation.
- Check to see if you have all the tools required for the installation.
- Verify that all fan components were received.
- Check drawings and layouts provided to locate where the Whalenado Fan is to be installed.
- Ensure work area is safe and that all security, policies and procedures for the facility are met.
- Inspect the lift device or mobile platform.
- Each person installing the Whalenado Fan must use a safety harness at all times.
- Other safety requirements may be required for installation.
- All workspace safety requirements, lock out procedures and hoarding of construction zone for the assembly and installation must be met and followed.

NFPA Requirements

National Fire Protection Agency Mandates: Ceiling Fans and Sprinkler Heads

When installing any Whalenado HVLS fan, you must ensure it complies with NFPA13 guidelines illustrated below:

As stated in NFPA13: 11.1.7 High Volume Low Speed (HVLS) Fans. The installation of HVLS fans in buildings equipped with sprinklers, including ESFR sprinklers, shall comply with the following:

1. The maximum fan diameter shall be 24 ft (7.3 m).
2. The HVLS fan shall be centered approximately between four adjacent sprinklers.
3. The vertical clearance from the HVLS fan to sprinkler deflector shall be a minimum of 3 ft (0.9 m).
4. All HVLS fans shall be interlocked to shut down immediately upon receiving a water-flow signal from the alarm system in accordance with the requirements of NFPA 72.

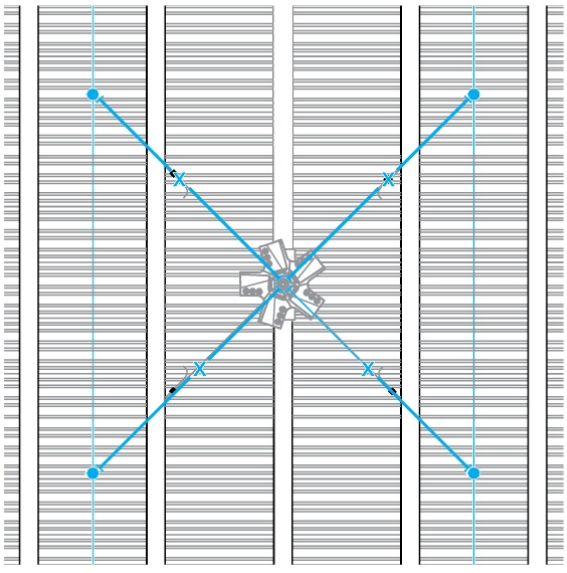

Start your installation.

3/ Different Mounting Applications

NOTE: The following mounting applications are representations only and are subject to change without notice**.** Contact your sales representative or the Whalenado office for complete mounting instructions.

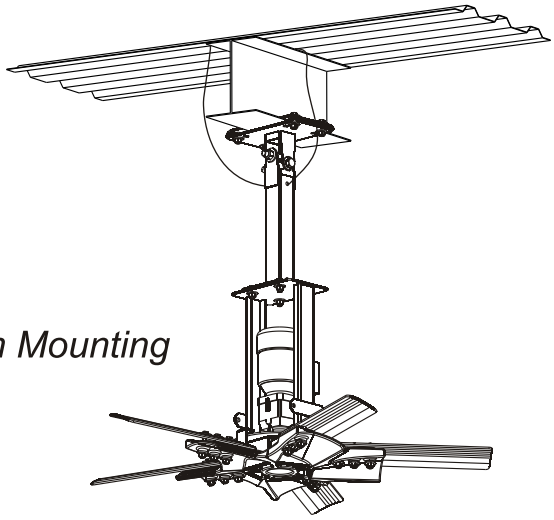

"I" Beam Mounting
Fig.2

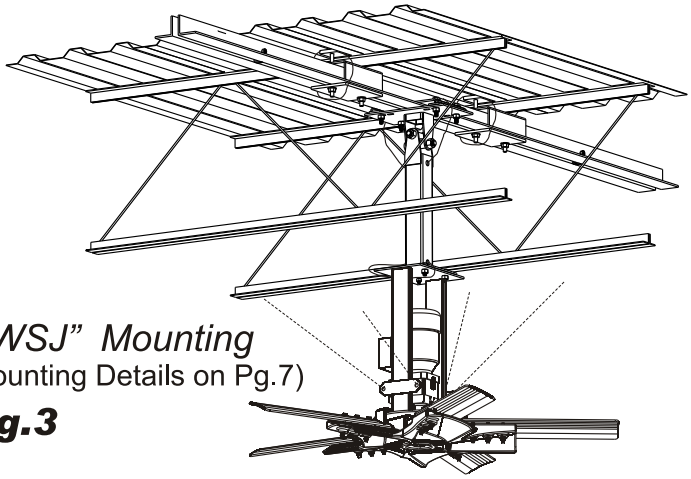

"OWSJ" Mounting
(Mounting Details on Pg.7)
Fig.3

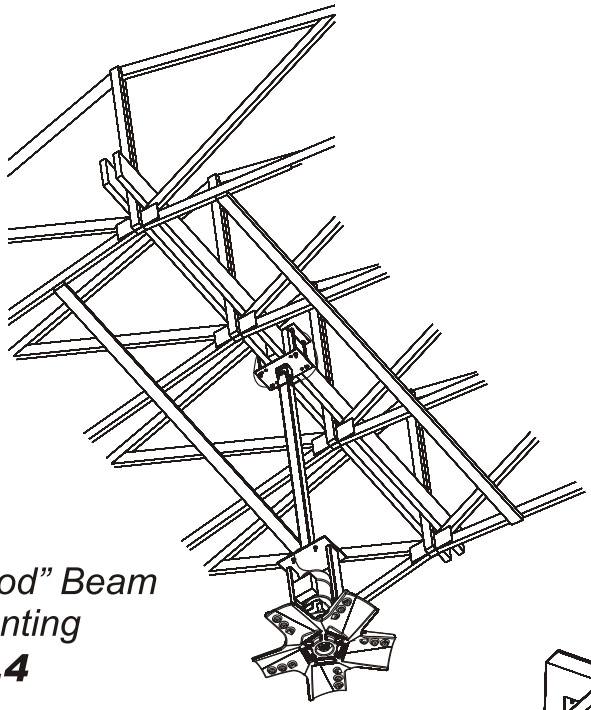

"Wood" Beam Mounting
Fig.4

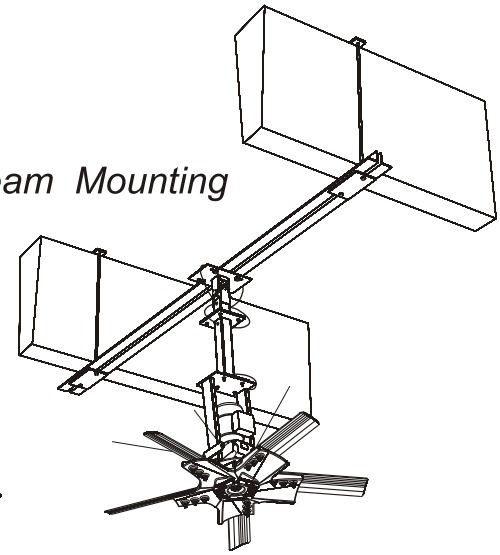

"Concrete" Beam Mounting
Fig.5

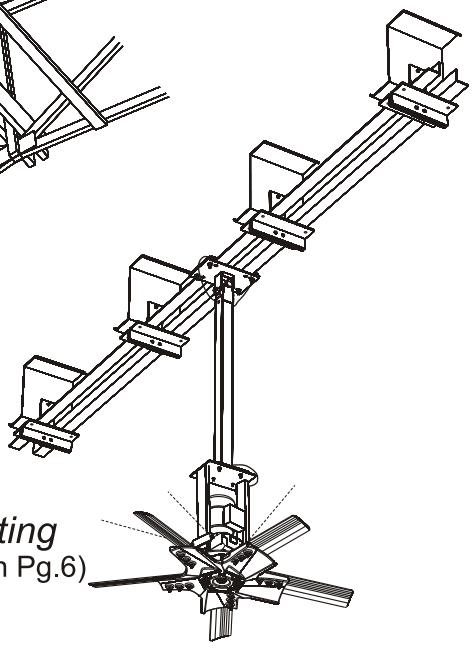

Purlin "Z" Mounting
(Mounting Details on Pg.6)
Fig.6

3/ Different Mounting Applications - Purlin Mounting Details

NOTE: Consult a structural engineer before installation.

1. Using 2 of the ½” x 2 ½” bolts, with ½” nylock nuts (washers not required), fit the bolts in the 2 bottom holes, on the underside of the bracket deck, and tighten.

2. From an accessible landmark, on the first purlin, measure to the centre line of the vertical two (2) mounting holes.

3. Drill the center of the top mounting hole with a ½" drill bit, so that there will be a minimum of 3 ¼” between the top of the purlin bracket deck and the bottom of the purlin.
   **If you are using a 4” x 3” beam, the minimum clearance changes to 4 ¼” from bracket deck to bottom of the purlin.

4. Using a ½” x 1 ¼” structural bolt, structural nut and washers, suspend the bracket using the top hole only.

5. Level the bracket and mark the centre of the bottom vertical hole. Drill the bottom mounting hole.

6. Before tightening the structural nuts and bolts, ensure the bracket is plumb and level.

7. Move to the last purlin for this beam set and repeat steps used for the first bracket.

8. Once the 2 purlin brackets are secured, place angle iron on brackets and secure in place using the manufactured 'J' clamps and supplied hardware.

9. Once installed and secured, move to the subsequent purlins.

10. Lift and hold the bracket into place and mark the center of the two (2) vertical mounting holes.

11. Drill holes with the ½” drill bit and secure using supplied hardware.

12. For safety, sling the 3/16” x 4' stainless steel safety cable around the purlin, purlin bracket and steel beams and fasten ends together using the supplied cable clamps. It may be necessary to drill a ¼” hole through the purlin, near the top, to sling the cable through.

Purlin install is now complete.

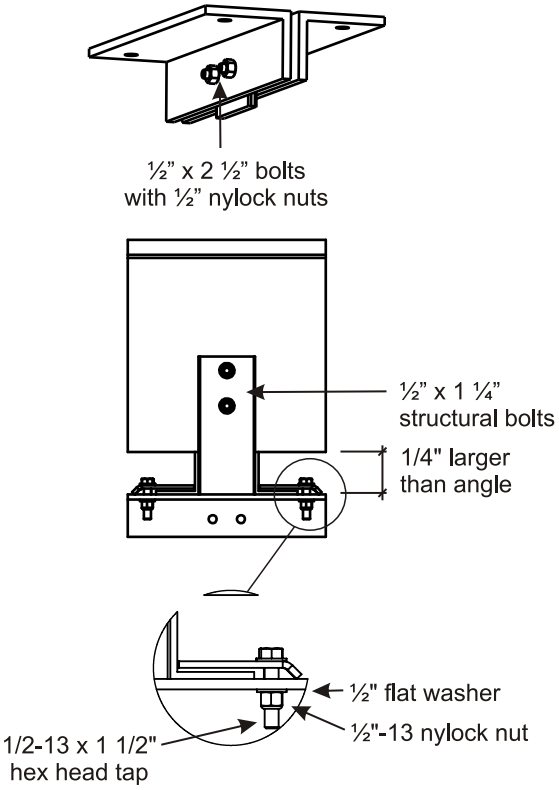

Completed Purlin Install Diagram

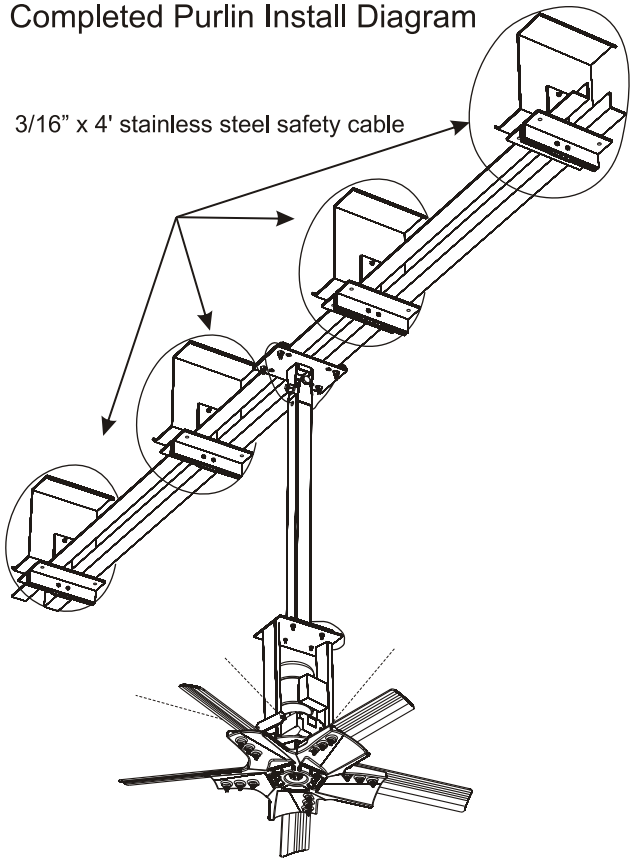

3/ Different Mounting Applications - OWSJ Mounting Details

1. Install 3” flat bar over the top chord of web truss. ensure that flat bar is installed with nut side up.

2. Install both threaded rod into 3” flat bar, beyond the flat surface of each nut.

3. Install channel open side down onto threaded rod using ½” nuts thus sandwiching top chord of truss. (as per details)

4. Install 6” flat bar onto threaded rod using ½”nylocks to hold in place (thread nylocks 1” onto rod) .

5. Multiple mounting points are required to carry the beam assembly. repeat steps 1-4 as required.

6. Assemble 3x3 angles together with nuts and bolts creating a beam assembly.

7. Take beam assembly and slide it on top of each 6” flat bar.

8. Tighten the ½” nylocks that holds the 6” flat bars sandwiching the entire assembly together.

9. Thread safety around beam assembly and top chord of truss at each mounting point. safety cable must be fasten together with looped ends as shown in detail.

Truss mount is now complete!

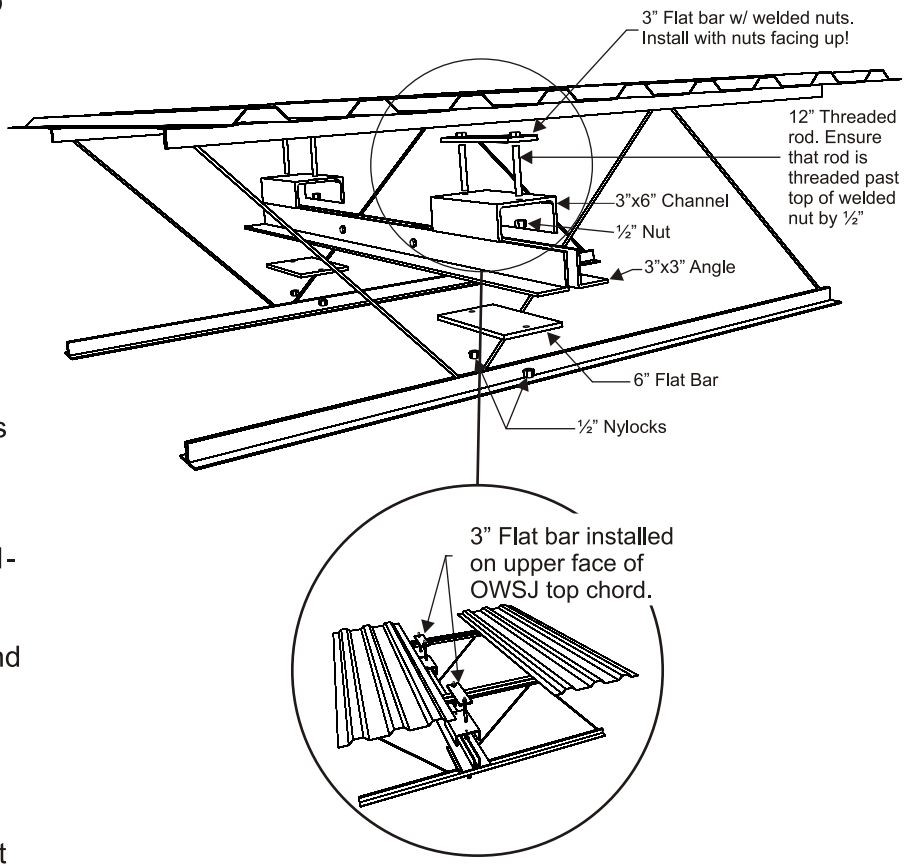

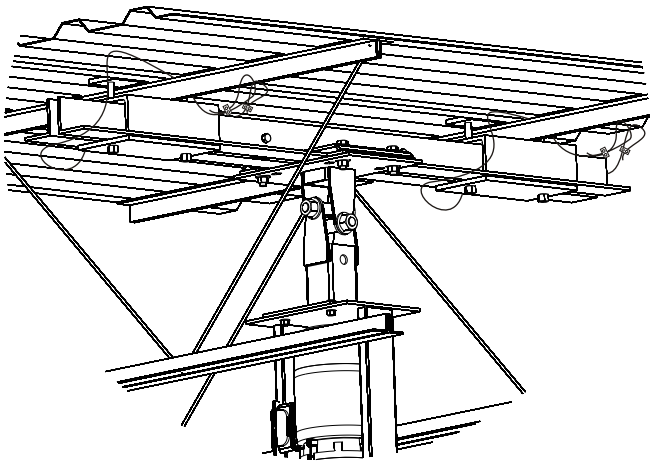

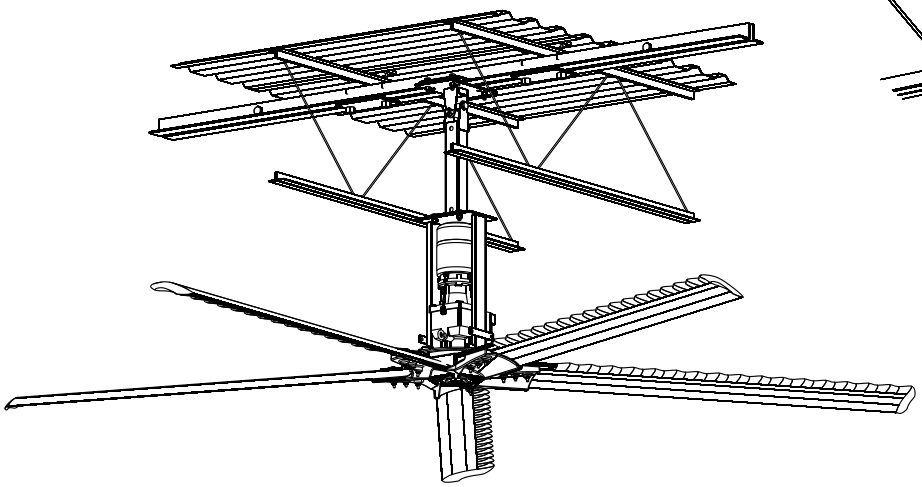

4/ Standard Mount

A Standard Mount package is used with all Whalenado Assemblies (except “Wood” Beam Mounting).

Standard drop mounts of 12”, 24” and 48” are available.

The package includes:
(2) mfg “I” Beam clamps
(2) mfg “I” Beam spacers (may or may not be required for assembly)
(1) Upper Pivot Plate
(1) Upper Pivot (pre-assembled)
(1) Stem for 12”, 24” & 48” packages
(4) Bolts, Nuts & Washers
(1) Cable 3/16” SS (Length 6.5 ft)
(4) Cable Clamps 3/16” (not shown)

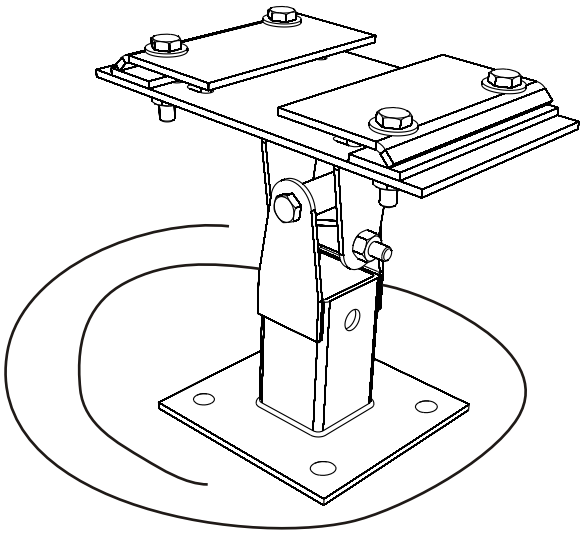

NOTE: Spacer may or may not be required. This is dependent upon the thickness of the support structure.

Fig.7

Installing the Mount

1. Sandwich the “I” Beam or OWSJ Beam between the mfg “I” Beam clamps and the upper pivot plate. Insert the mfg “I” Beam spacers if required.
2. Insert the bolts, washers and tighten the nylocks (Fig.8).
3. Position the safety cable as per Fig.8, loop at both ends.
4. Fasten cable clamps as typical cable clamp installation (Fig.9). Cable should be relatively snug.

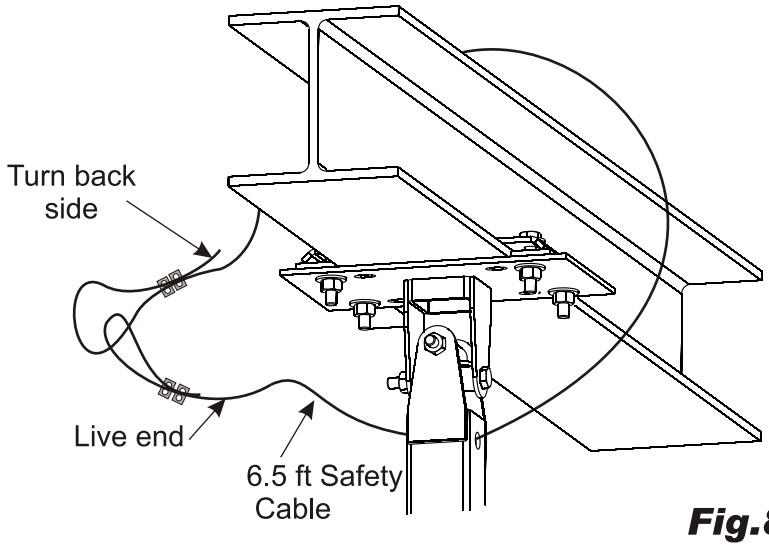

Fig.8

Typical Cable Clamp Installation

When placing cable clamps on the wire, it is imperative that the U-bolt side of the clip is placed on the short turn back side and the saddle goes on the long side (the “live” end).

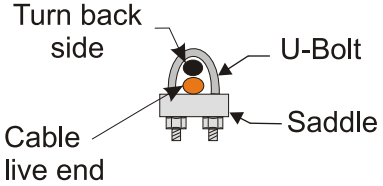

Fig.9

5/ Extensions

The package includes:
(1) Extension (standard 2 ft or 4 ft)
(4) Bolts ½" x 1½" UNC
(8) Washers Flat ½"
(4) Nylocks ½" UNC
(1) Cable 3/16" SS
(Length 3 ft)
(4) Cable Clamps 3/16"

Depending on your assembly, your package may include an extension. The extension with the standard mount will make up the overall drop length.

If a specific drop distance is required, a custom extension may be an option and can be ordered.

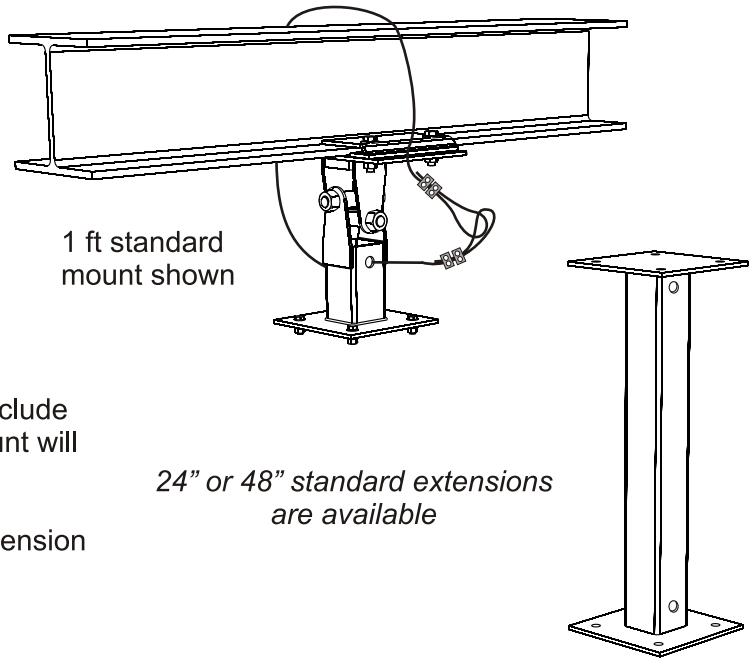

24" or 48" standard extensions are available

Fig.10

You are only allowed to use a maximum of two extensions per assembly!

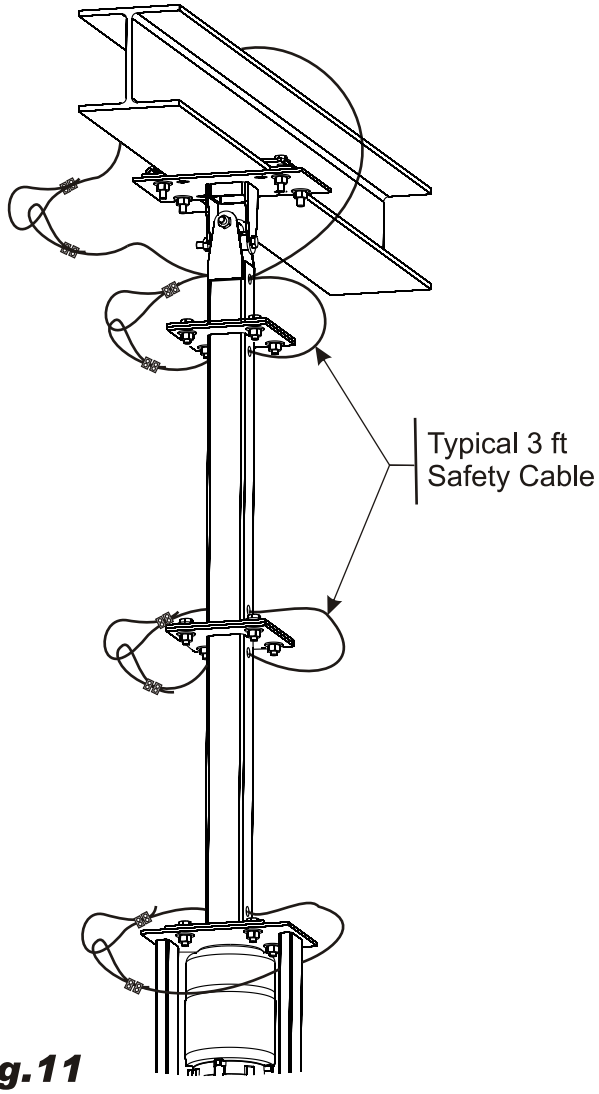

Fig.11

Installing the Extension

1. Fasten top plate of extension to the bottom plate of the standard mount using 1/2" bolts, nuts and washers.
2. Position the safety cable as per Fig.11, loop at both ends.
3. Fasten cable clamps 2 per end and as per typical cable clamp installation (Fig.9). Cable should be relatively snug.

Every connection between components (mounts, extensions and fan frame) must include a safety cable as shown throughout this manual.

6/ Main Hub and Drive Assembly

The package includes:

(1) Hub
(1) Fan frame
(1) Trantorque nut
(1) Motor
(1) Gear Reducer
(1) Whalenado sign

All these items pre-assembled

(4) Bolts ½" x 1½" UNC
(8) Washers Flat ½"
(4) Nylock ½" UNC
(1) Cable 3/16" SS (4 ft)
(4) Cable clamp 3/16"

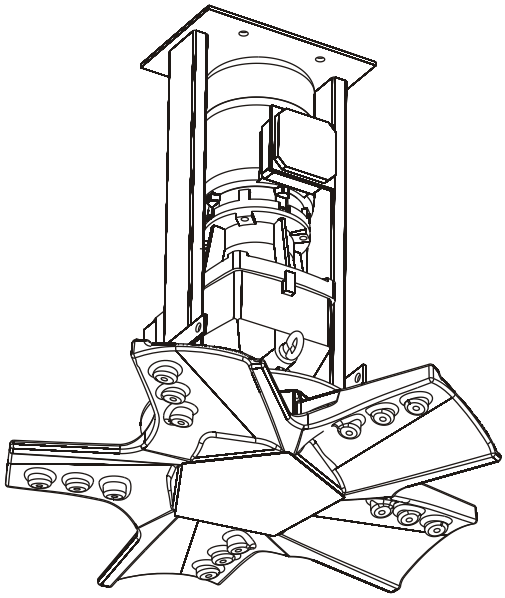

Fig.12

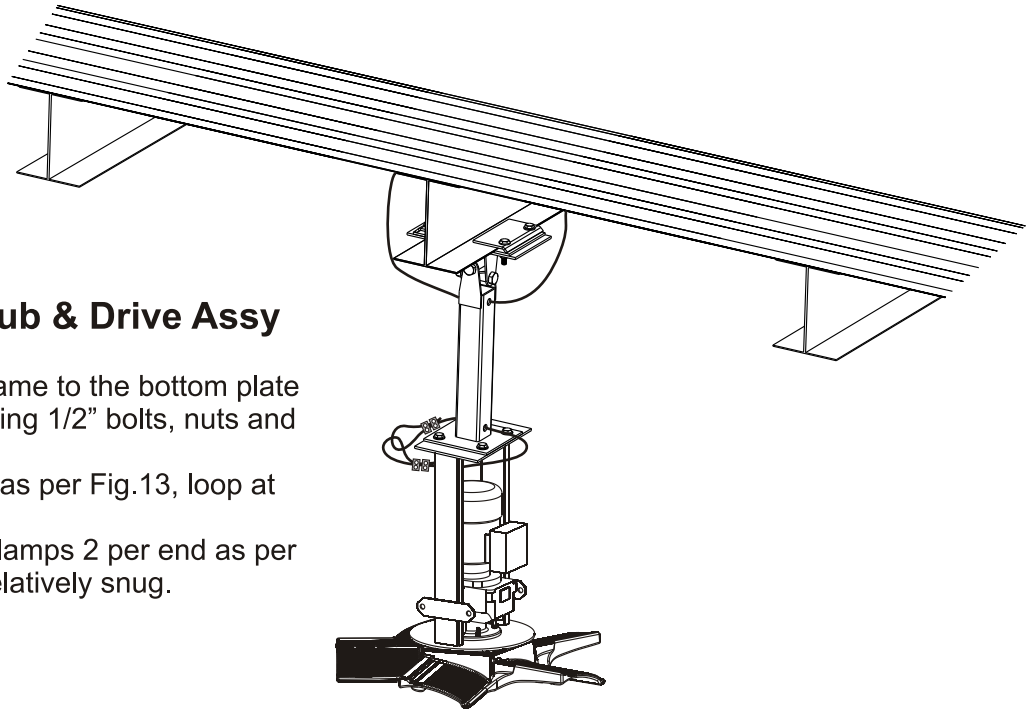

Installing the Main Hub & Drive Assy

1. Fasten top plate of fan frame to the bottom plate of the standard mount using 1/2" bolts, nuts and washers.
2. Position the safety cable as per Fig.13, loop at both ends.
3. Install and fasten cable clamps 2 per end as per Fig.9. Cable should be relatively snug.

Fig.13

7/ Guy Wires

The package includes:
(4) Cable 1/8” SS (60 ft)
(8) Thimbles 1/4” SS
(16) Cable Clamps 1/8”

Extra hardware required:
(4) Forged Eye Bolts 1/4”
(4) Nuts 1/4”
(4) Nylocks 1/4”
(8) Washers Flat 1/4”

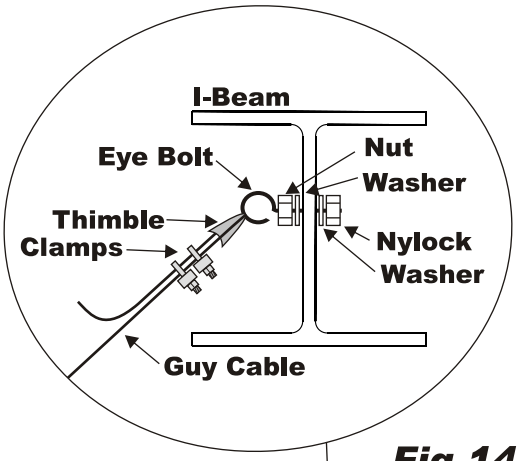

Fig.14

DO NOT USE TURNBUCKLES

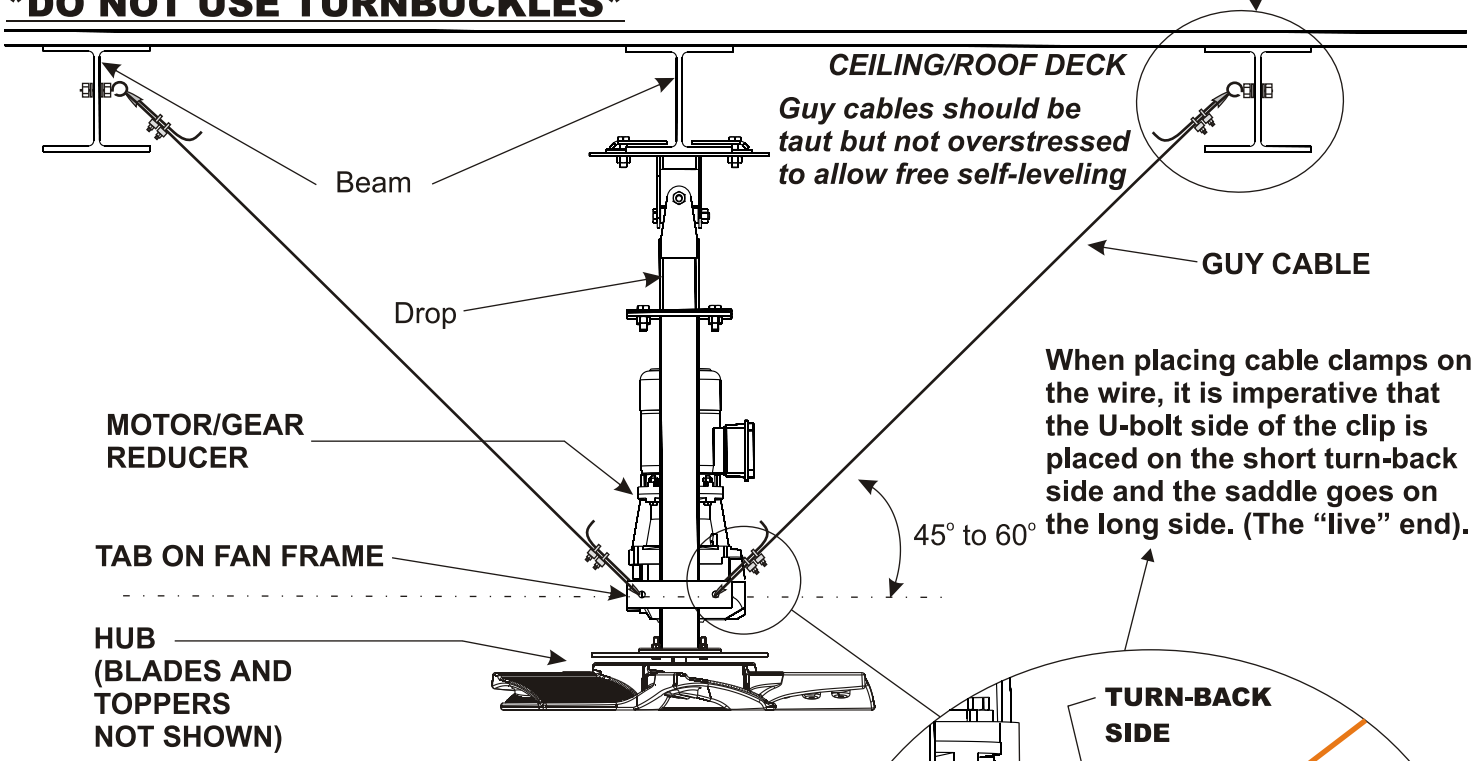

Fig.15

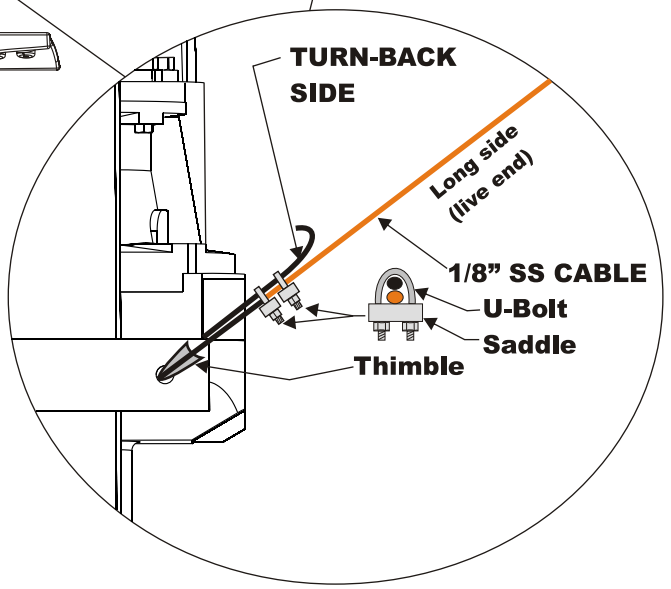

Fig.16

STRUCTURAL NOTE: **Guy cables must be installed or fastened to a structural component of the building at the angle shown in Fig.15 and Fig.17.**

Installing Guy Wires

1. Determine mounting position on ceiling and establish the angle between 45°- 60° for the cable. Determine correct location on the I Beam to drill 5/16" diameter hole for the eye bolt. For example, if fan is 4 ft down from ceiling, cables should be mounted approximately 4 ft away from fan.
2. Install eye bolt with nuts and washers in I Beam as per Fig.15.
3. Measure the run of cable required and cut cable approximately 2 ft longer. **NOTE:** longer runs than 15 ft will require additional hardware.
4. Secure it with 1 thimble and 2 cable clamps (Fig.16). Repeat using the other 3 pieces of guy wire cables, thimbles and cable clamps (Fig.16).
5. Guy wires should be taut but not over-stressed to allow free self-levelling. They should also by approx. 90° apart (Fig.17).
6. **Check to see if the fan is level by placing your level vertically on the side of the fan frame. If adjustment is needed, slightly tighten the guy wires on proper side.**

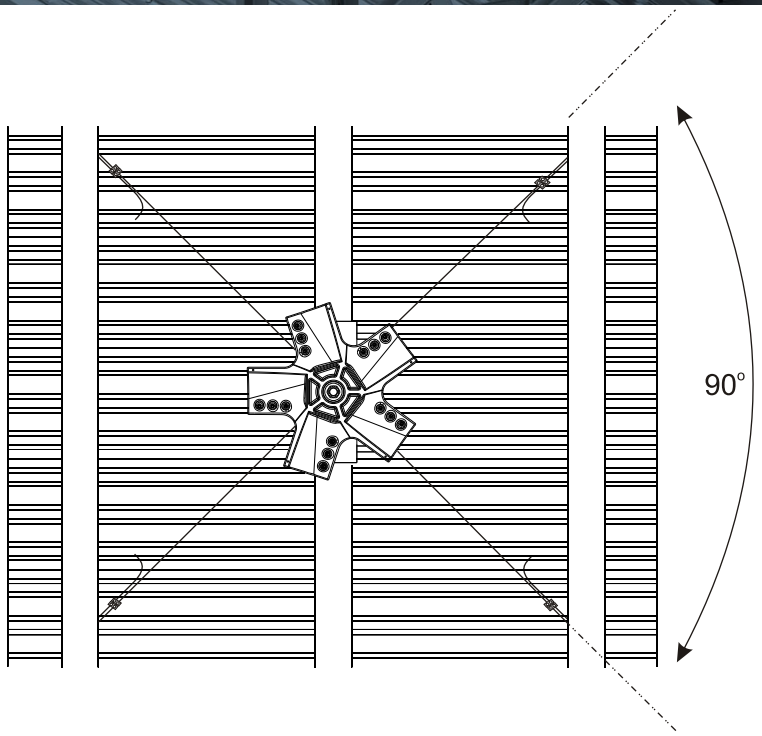

Fig.17

NOTE: Fans hanging lower than 10 ft from where the guy wires will mount will require additional cable.

8/ Blade Assembly

The assembly includes:
(5) Blades
(5) Blade toppers
(10) Bolts 3/8" x 3½" UNC
(5) Bolts 3/8" x 4" UNC
(15) Nylocks 3/8" UNC
(30) Washers Flat 3/8"

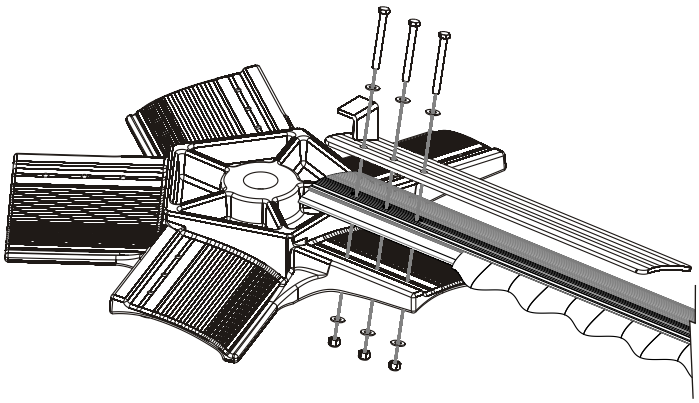

Fig.18

Installing the Blade Assembly

1. Clamp a blade between blade topper and hub using 3/8" bolts, washers and nylocks (Fig.18). Fasten 4" long bolts through the boss closest to the hub. All other bolts will be 3½" long.
2. Continue until all 5 blades have been fastened and tighten down.
3. Turn the fan by hand to ensure that there are no obstructions with the blades.

Blade Topper Variations

1. 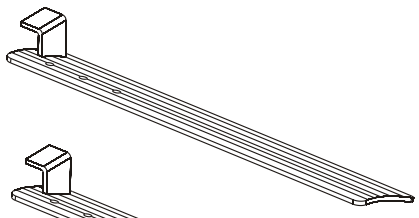
2. 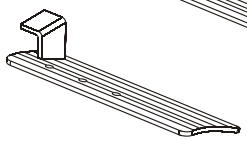
3. 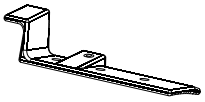

Leveling the fan

1. **After your fan is installed, check the level again by placing your level vertically on the side of the fan frame. If adjustment is needed slightly tighten the guy wire on the appropriate side.**
2. Once levelled your fan is installed and ready for electrical installation / connection.

Fig.19

For proper electrical connection please consult the Whalenado Electrical Installation Manual.

ATTENTION!

1. **Remove rubber plug prior to start up**.
2. Discard rubber plug after removal.
3. **Discard pink tag if attached to unit.**
3. If yellow sticker is attached to unit, it can remain in place.

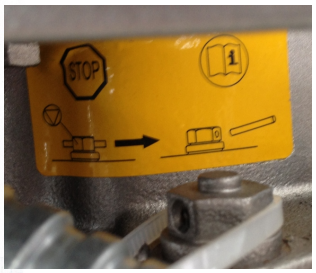

For proper electrical connection please consult the Whalenado Electrical Installation Manual.

Itemized Checklist

and

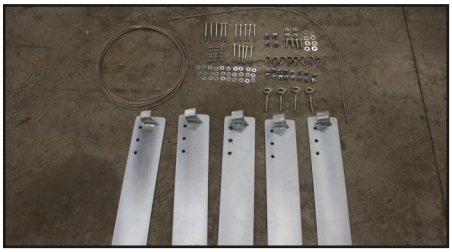

Whalenado Fan Package
8ft, 12ft, 16ft, 20ft, 24ft
EN600x5052-5066

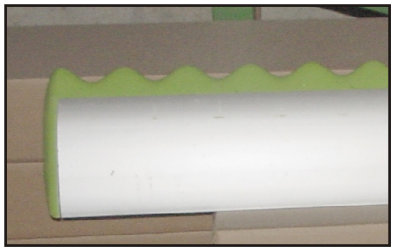

Whalenado Blade Set
20ft, 24ft
EN600x5914-5916

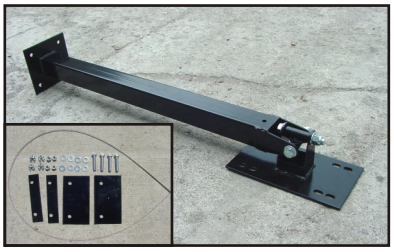

Packaged UMH Mount
1ft, 2ft, 4ft
EN400x2001-2004

Mounting Options

Web Truss Beam
EN400x1159-1161

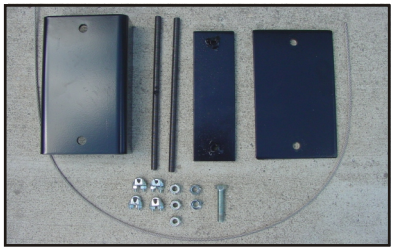

Web Truss Beam
Bracket Kit
EN400x1162-1163

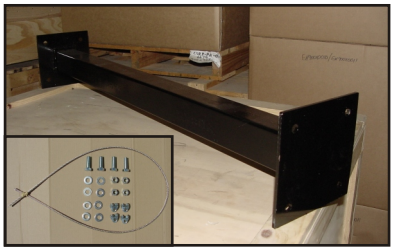

Packaged Extension Mount
2ft, 4ft
EN405x1002-1004

Recommended Maintenance Schedule

1. No maintenance shall be done on the fan, mount or guy wires while it is in operation or powered.
2. No maintenance shall be done on the fan controller while powered unless the task involves reprogramming or troubleshooting the electrical system.
3. No maintenance shall be done within a 6m horizontal radius of the fan and 4 ft below and none above the blade level while it is in operation.
4. While doing maintenance on the fan, mount, or guy wires, a safety barrier shall be erected at a radius of 6m of the centre of the fan.
5. The fan controller shall be locked out while maintenance is ongoing on the fan, mount, or guy wires.
6. All personnel working on the fan, mount, or guy wires, shall wear the appropriate personal safety equipment as mandated by local, provincial, and national regulations.
7. A risk assessment shall be performed before any maintenance is done on the fan, mount, guy wires and fan controller.
8. A tailboard meeting shall be performed before any work is done. A checklist shall be completed and shall include any emergency contacts for the area.

Power Unit

Motor

Our motor or gearmotor manufacturers supply Northern Dock Systems with motors/gearmotors built for our application. Designed for use with variable frequency drives; they are wound with 200°C moisture resistant Inverter Spike Resistant (ISR) magnetic wire which dramatically extends the life of the motor compared to motors with non-ISR wire. They have a three year limited warranty.

Maintenance Schedule

Initial Six Months

- Check for hot spots
- Re-tighten all loose electrical connections

Repeat Every Eighteen Months Thereafter

Gear Reducer/Gearmotor

Whalenado Fans are driven through Nord Helical Gear Reducers/Gearmotors. Nord is the best gear reducer for our particular application in terms of precision, durability, efficiency, reliability and quiet operation. They have a three year limited warranty.

Maintenance Schedule

Initial Eighteen Months

- Check oil level

Recommend Changing Oil Every 20,000 Hours of Normal Use

Blades

The airfoil blades are designed for maximum efficiency and quietness with a minimum air disruption directly below the fan. All our blade shapes are extruded from 6063-aluminum alloy and heat-treated to T-5 condition. They are anodized to .0004 10 Microns clear for corrosion resistance and ease of cleaning. The blades have a lifetime warranty.

Recommended Maintenance Schedule Continued

Maintenance Schedule

Initial Six Months

- Ensure blades are intact, level and clean as required

Every Eighteen to Thirty-Six Months Thereafter

Drop/Mounting

The drop and mounting system is designed to prevent vibration or horizontal movement from being transferred back into the building structure. The system is easily installed in almost any building and allows fans to hang level from beams.

Maintenance Schedule

Initial Six Months

- Physical check of fan guy wires, re-tightening of clamps if required
- Check all nuts/bolts/clamps (missing/loose/damaged)
- Physical check of safety cable, re-tightening of clamps if required

After Eighteen Months Thereafter

Control Panel

Whalenado controls are variable frequency drives which provide soft start/stop, variable speed control and overload protection for the motors. The VFD also allows fan control to be automated and/or integrated with other systems. The controls come with a three year limited warranty.

Maintenance Schedule

Initial Twelve Months

- Check for loose/discoloured wires
- Check for hot spots
- Re-tighten all loose electrical connections

Every Eighteen Months Thereafter

NOTE: Maintenance schedule is based on running 5,000 hrs / year and is a guide line to ensure safe and continuous operation of the fan(s). In case of extreme operating (e.g. high humidity, aggressive environment or large temperature variations), shorter intervals between service is recommended.

Safety Precautions

1. Safety cable installed as per Fig.11 in the *Whalenado Fan Installation Guide*.
2. Guy wire installed as per Fig.15, Fig.16 and Fig.17 in the *WhalenadoFan Installation Guide*.
3. Blade toppers installed as per Fig.18 in the *Whalenado Fan Installation Guide*.
4. See next page for required clearances.
5. If installed in storage facility between racks, signs must be installed identifying fan locations.
6. The motor has thermal protection in case of overheating.
7. The variable frequency drive has several safety devices such as current limit, motor overload, minimum and maximum speed control. The controller also features a Stop button for emergency stoppage.

Whalenado Fan Clearance Requirements

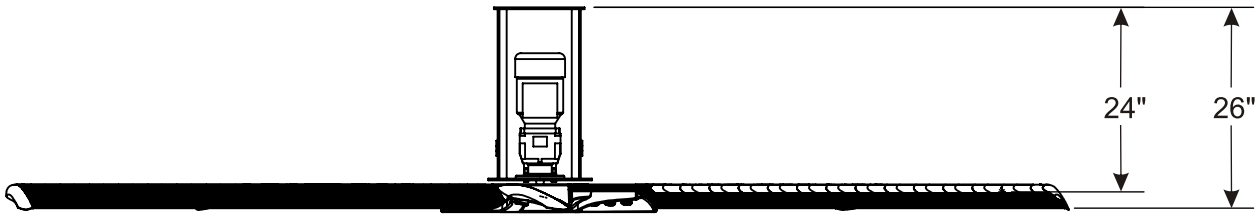

Fan Frame Detail

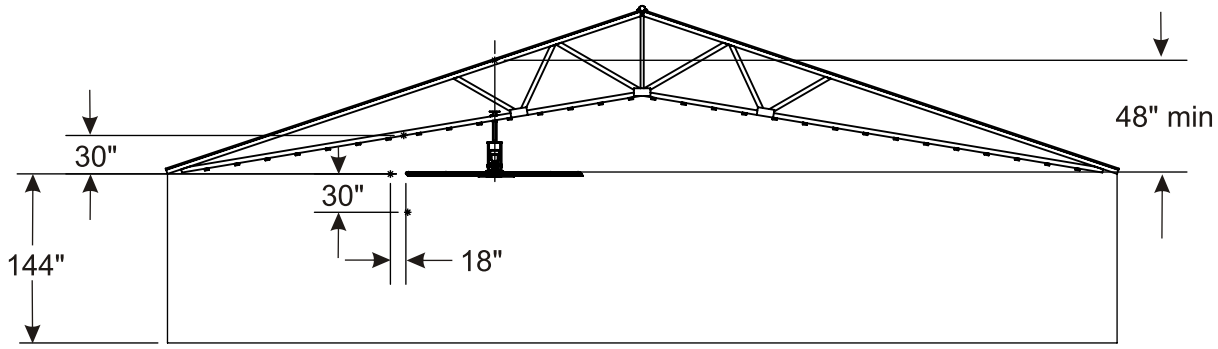

Sloped Roof

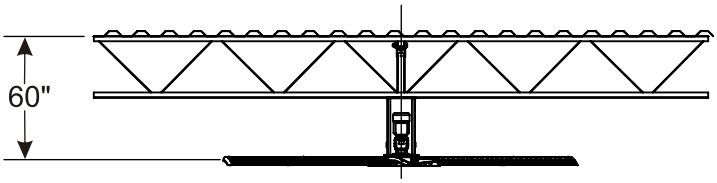

Flat Roof

Clearances

- Min 60" center of fan to roof desk for ideal operating performance without compromising overall fan performance
- Min 30" from fan blade's leading edge to obstruction above or below fan
- Min 18" from side of fan to any obstruction
- Min floor to fan airfoil is 20' for 20' or 24' diamter fans, 16' for 16' fans, 12' for 12' fans and 10' for 8' fans.

Contractor is responsible for verifying all site conditions to include field dimensions where applicable. If the contractor elects to make any changes without notifying Whalenado the contractor is responsible for the same. All drawings are to be used as general architectural intent unless otherwise stamped. See Engineer drawings for structural design information. Contractor to ensure that all building departments and authorities are informed in regard to the work and that all permits are attained before commencing work.

Recommended Maintenance Checklist

Fan Size:

Serial #:

Location:

Date	Initials

Fan Size:

Serial #:

Location:

Date	Initials

Fan Size:

Serial #:

Location:

Date	Initials

Limitation of Warranties and Liabilities
Three Year Limited Warranty

Whalenado fans are of industrial grade construction and should provide many years of virtually maintenance-free use. Warranty duration is as follows:

a)	Air foil shaped Blade	Lifetime Warranty
b)	Aluminum alloy Hub	Lifetime Warranty
c)	Motor	15 year Limited Warranty
d)	Gear Reducer	15 year Limited Warranty
e)	VFD control panel	3 year Limited Warranty
f)	Labour	1 year Limited Warranty (pre-approved)
g)	Custom fan wraps/paint	1 year Limited Warranty

To register this product under the 15 year pro-rated warranty and retain proof of ownership, the End-User must return to the Warranty Registration Card within thirty (30) days of purchase.

Northern Dock Systems warrants that this Product will under normal use and service as specified by Northern Dock Systems, operate properly and be free of defects in materials and workmanship for a period of three years from the date of purchase by customer. The term “operate properly” in this context applies to mechanical, electrical and structural functions only. No guarantee, unless and except by separate written agreement, is made regarding dimensions of air movement generated or the effectiveness of this Product for its intended purpose.

Labour Warranty will cover all reasonable costs paid by the customer to an independent contractor (including dealers) to remove, dismantle, reassemble or reinstall any of the warranted Products during the first year that the Product is in service. All receipts are to be submitted to Northern Dock Systems which will be paid upon completion of the installation of the Product and after the return of the failed unit. Northern Dock Systems will only issue a credit/cheque to the customer/dealer and will not be held responsible for paying the independent contractor.

WARRANTY EXCLUSIONS

Please note that the following may or could void any or all of the above listed Warranties.

- Not following required installation procedures as in installation guide and all other documentation supplied with the fans and related equipment, supplied by manufacturers of individual fan and control components.
- Not following all relevant codes and ordinances, not limited to National Electrical Code, provincial or state and local building codes.
- Not following electrical engineering industry standards regarding approved method of installing solid-state electrical equipment having characteristics of fans and all components included in this product.
- Any modification to installation, product and or controls without written authorization from Northern Dock Systems, even if attempting to diagnose and or repair a problem.
- Misuse, abuse, accidents, unreasonable use or Acts of God.
- Incorrect electrical current, voltage or supply.
- Running fans at higher than recommended speeds.
- Re-setting parameters of any control without prior approval from Northern Dock Systems.
- Failure to use all installation and mounting hardware supplied by Northern Dock Systems.
- Failure to perform periodic maintenance as detailed in the Whalenado Fan Installation Guide.

Limitation of Warranties and Liabilities
Three Year Limited Warranty

Northern Dock Systems reserves the right to make the final determination, based on its own evaluation of the components as to whether:
The problem in question is the result of a defect in design, workmanship or materials and not the result of error, misuse or abuse on the part of the customer as stated above.
Whether the problem or defect is material and requires action under this Warranty.
Whether the remedy of repair or replacement is appropriate.

Northern Dock Systems will not be responsible for remedial work necessary to correct installation procedures that do not conform to those established by the instructions, codes and standards, regardless of when the installation occurred.

With regard to electrical and electronic components provided by Northern Dock Systems that comprise part of the Products, including motors, motor drives and variable frequency drives, Northern Dock Systems relies on the determination by the original manufacturer as to whether the failure of such component was the result of a defect. If the manufacturer of such component determines that there was no defect and therefore refuses to cover it under warranty, Northern Dock Systems likewise will not warranty such item unless Northern Dock Systems determines that the failure of such electrical or electronic component was the result of a defect of design, workmanship or material within some other part of the products.

WARRANTY DURATION
With respect to replacement or repair rendered, Northern Dock Systems warrants that the parts replaced or repaired will operate properly and be free from defects in materials and workmanship for a period of 90 days from the shipment date of the replacement products to the customer, or for the remainder of the original Warranty period, whichever is longer.

WARRANTY CLAIM INSTRUCTIONS

1. Contact your original dealer/salesman of the purchase when you first notice problem with the Product.
2. It will be the responsibility of the dealer or salesman to assist the customer in determining what Product is causing the problem.
3. If they cannot diagnose the problem, they are to contact Northern Dock Systems with all the necessary information.
4. The appropriate department will then be in contact with the customer to determine the cause of the problem.
5. Once diagnosed, submit a Purchase Order for a replacement component complete with price.
6. Replacement component will be shipped out upon receipt of the PO. This PO allows for an order to be established in the Northern Dock Systems System.
7. Once the units have been changed over, submit all pre-approved costs to Northern Dock Systems for payment.
8. No credits or cheques will be issued until all original products are received back at Northern Dock Systems unless Northern Dock Systems directs otherwise.

Limitation of Warranties and Liabilities
Fifteen Year Service Life Prorated Warranty

WARRANTOR: The warrantor for the limited warranties set forth herein is Northern Dock Systems ("Company").

LIMITED WARRANTY: This prorated limited warranty (this "Warranty") applies only to the original End-User (the "End-User") of any Whalenado Fan(s) (Individually and collectively, the "Product") and cannot be transferred. This Warranty applies even in the event that the Product is initially sold by Company for resale to End-User. This Warranty applies to U.S and Canada purchases only. Outside U.S and Canada; standard Three-Year Warranty applies.

WHAT THIS WARRANTY COVERS: In addition to the Lifetime Warranty on blades, hub and frame; and the standard Three-Year Limited Warranty covering all other components, the Warrantor warrants that the Product will have a service life (defined below) of Fifteen Years from the date of purchase (the "Fifteen Year Service Life") when used in accordance with the operation and maintenance procedures prescribed in the Whalenado Fan Installation Manuals.

If Company finds, in its sole discretion, that any Product has not provided the Fifteen-Year Service Life, Company will, as its sole obligation and the End-User's sole remedy for Company's breach of this Warranty, repair or replace the Product, at its option, F.O.B Company's factory, for a charge, payable to Company prorated on the following basis:

The End-User will be allowed a credit against Company's list price of equivalent equipment at the time of return of the Product to Company, in proportion to the percentage of Fifteen-Year Service Life remaining at the time of return of the Product to the Company. The End-User will assume responsibility to pay the balance of the list price; and Company reserves the right to require payment prior to delivery of the repaired or replacement equipment.

For the avoidance of doubt, Company's responsibilities under this Warranty are as follows:

Year 1-3 - Product repaired or replaced pursuant to terms if Limited Warranty applies

Year 4-15 - Unit Credit ($) = Current List Price X $\frac{\text{Years of Unexpired Life}}{\text{15 Years of Warranted Life}}$

WHAT THIS WARRANTY DOES NOT COVER:

- any defects or damages caused by:
  - (a) failure to properly store the Product before installation;
  - (b) shipping and delivery of the Product if shipping is FOB Factory;
  - (c) neglect, accident, abuse, misuse, misapplication, or incorrect installation;
  - (d) repair or alteration not authorized in writing by Company personnel;
  - (e) improper testing, operation, maintenance, adjustment, or modification of any kind not authorized in writing by Company personnel;
  - OR
  - (f) use the Product under other than normal operating conditions or in a manner inconsistent with the Product's label or Instructions.
  - controls and or any other external electronic controlling devices.
  - exclusions listed in the standard Three-Year Limited Warranty.
  - any products or components purchased prior to effective date of this Warranty.

Limitation of Warranties and Liabilities
Fifteen Year Service Life Prorated Warranty

This Warranty is not valid:

(a) unless the End-User returns to Company the Warranty Registration Card within thirty (30) days of purchase to show proof of ownership; OR
(b) if the Product's serial numbers have been removed or are illegible;
OR
(c) if any warranted items repaired or replaced pursuant to this Warranty will be warranted for the remaining portion of the original Warranty subject to all the terms thereof. Company shall not be responsible for any charges for testing, checking, removal or installation of warranted items unless authorized in writing by Company personnel;
OR
(d) if failed to submit records at time of performing Recommended Maintenance Schedule, minimum every 18 months.

LIMITATION OF LIABILITY: The remedies of the End-User set forth herein are exclusive and are the sole remedies for any failure of Company to comply with its obligations hereunder. In no event shall Company be liable in contract, in tort (including negligence or strict liability) or otherwise for damage to property or equipment other than the Products, including loss of profits or revenue, loss of use of Products, cost of capital, claims of customers of the End-User or any special, indirect, incidental or consequential damages whatsoever. The total cumulative liability of Company hereunder whether the claims are based in contract (including indemnity), in tort (including negligence or strict liability) or otherwise, shall not exceed the price of the Product on which such liability is based. Company shall not be responsible for failure to provide service or parts due to causes beyond Company's reasonable control.

END-USER'S OBLIGATIONS: In order to receive the benefits of this Warranty, the End-User must use the Product in a normal way; follow the Product's Installation Manuals; and protect against further damage to the Product if there is a covered defect. Submit records at time of performing Recommended Maintenance Schedule, minimum every 18 months.

OTHER LIMITATIONS: Company's obligations under this Warranty are expressly conditioned upon receipt by Company of all payments due to it, including all applicable interest charges. During such time as Company has not received payment of any amount due to it for the Product, in accordance with the contract terms under which the Product is sold, Company shall have no obligation under this Warranty. Also during such time, the period of this Warranty shall continue to run and the expiration of this Warranty shall not be extended upon payment of any overdue or unpaid amounts.

COSTS NOT RELATED TO WARRANTY: The End-User shall be invoiced for, and shall pay for, all services not expressly provided for by the terms of Warranty, including without limitation, site calls involving an inspection that determines no corrective maintenance is required. Any costs for replacement equipment, installation, materials, freight charges, travel expenses or labor of Company representatives outside the terms of this Warranty will be borne by the End-User.

OBTAIN WARRANTY SERVICE: Call Northern Dock Systems, Service 1(844)286-NADO. Company will not accept any product for return, credit or exchange unless expressly authorized by Company in writing and delivered FOB Company factory with proper Return Authorization Number attached to the product.

Fifteen Year Service Life Prorated Warranty Form

The Whalenado Fan is covered by our standard Three Year Limited Warranty. To register for our extended Fifteen Year Prorated Limited Warranty, you must complete and return this form within 30 days of purchase by fax to Fax: (905) 625-0187 OR email info@whalenado.com. See Whalenado Fifteen Year Prorated Limited Warranty for details and restrictions.

For further information on all Northern Dock Systems products check out our website at www.northerndocksystems.com or contact:
Northern Dock Systems, 1200 Aerowood Drive, Unit 25, Mississauga, Ontario L4W 2S7
Phone: (905) 625-1758 or 1 (866) 601-1758
Fax: (905) 625-0187

Name of Customer: _____

Address: _____

Phone No: (___) _____ Fax No: (___) _____

Name of Facility Where Fans Installed: _____

Contact Name: _____ Phone No: (___) _____

Address: _____

Date of Purchase: _____

Quantity of Whalenado Fans: _____ Size of Whalenado Fans: _____

Fan Serial Number(s): _____

Controller Serial Number(s): _____

Special Declarations or Comments: _____

_____

_____

_____

You must complete and return this form within 30 days of purchase by fax to (905) 625-0187 OR email info@whalenado.com.