Electrical Installation & Operation Manual

All installation wiring must conform to your National Electrical Code and local codes. While we believe that using Envira-North's controls and following our instructions will result in an installation that meets those requirements, we cannot guarantee it. Code compliance is ultimately the installer's and/or user's responsibility.

Subject to changes without notification.

Manufactured By Envira-North Ltd

IMPORTANT
The installation of a wind sensor is mandatory in agricultural installations.
See WindSwitch manual for installation.

© 2014 Envira-North Systems Ltd

Table of Contents

Cover Page Pg.1
Table of Contents. Pg.2
Safety Precautions Pg.2
Wire Requirements Pg.3
Cable Length - Load Reactor and dV/dT Filter. Pg.4
Power Requirements Pg.5
Wire Locations. Pg.6
Wire Connections (VFD) Pg.7
Wire Connections (Motor) Pg.8
Wire Connections (VFD to LVC &TFD-1) Pg.9
Operation Instructions of VFD w/o LVC Pg.10
Operation Instructions of LVC & TFD-1. . . . . Pg.11
Wire Connections (MFC with AC Tech SMV & Tri-Star). Pg.12
Operation Instructions of MFC with AC Tech SMV & Tri-Star. Pg.13

IMPORTANT
The installation of a wind sensor is mandatory in agricultural installations.

Safety Precautions

- All installations must be installed by a qualified person.
- Do not work on live equipment. Use lock-out procedures.

© 2014 Envira-North Systems Ltd

Wire Requirements

- Size of input and output wires depend on length and current draw of VFD and motor.
- See Power Requirements for current draw of VFD and motor.

VFD = Variable Frequency Drive
LVC = Low Voltage Controller
TFD-1 = Temperature Controller

An separate insulated ground must be provided to each VFD from the electrical panel. This will reduce the noise from being radiated in other equipment.

**Motor is rated with an Insulation Class F;
ensure proper wiring is used as per current electrical codes.**

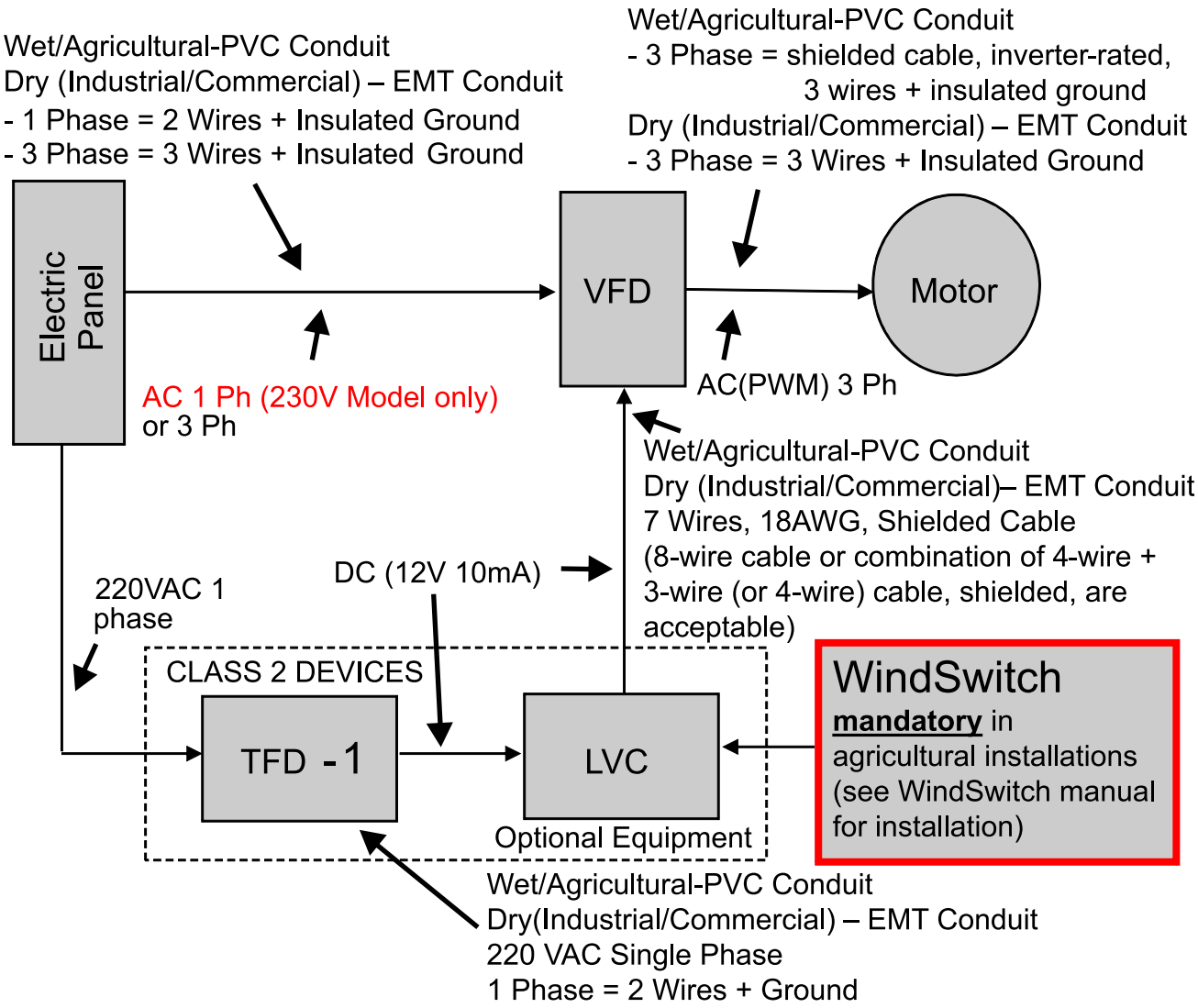

© 2014 Envira-North Systems Ltd

Cable Length - Load Reactor and dV/dT Filter

- The cable distance between the VFD and the motor has changed. In all cases it has been reduced due to variable cable quality, variations in workmanship and changes in technology in the VFD.

- In the following table; the cable length includes vertical distances. There will 3 different classes of distance having distance measurement, addition of load reactor or dV/dT filter and change in the horsepower rating of the VFD. In the cases of adding either a load reactor or filter, the device has to be installed close to the VFD (within 6 to 10 feet) (Load side of VFD).

Table. Cable Length Between the VFD and Motor			
Normal Length	No Additional Device Required or Change in VFD HP		
	230VAC	Max 250’	No HP change
	460 VAC	Max 160’	No HP change
	600 VAC	Max 125’	No HP change
Above Normal Length	Load Reactor Required (1 ½ or 3 % Impedance)		
	230 VAC	250-400’	No HP change
	460 VAC	160-250’	No HP change
	600 VAC	125-160’	No HP change
Greater Than Above Normal	dV/dT Filter Required Plus Upsize VFD HP		
	230 VAC	Greater than 400’ and less than 1000 ’	+1HP
	460 VAC	Greater than 250’ and less than 1000’	+1HP
(*1)	600 VAC	Greater than 160’ and less than 1000’	+1HP

The filter and load reactor can operate at either 50 or 60Hz.

(*1) When using 600VAC VFD, special care will have to be taken as VFD manufacturers have noted that excessive reflective voltages are generated due to the distance. The voltages may shorten the life expectancy of the motors and VFDs and may cause bearings failures if not dealt accordingly to the above instructions.

© 2014 Envira-North Systems Ltd

Power Requirements

	Input 240V		Output 240v	Input 400V	Output 400V	Input 480V	Output 480V	Input 600V	Output 600V
VFD	1 Ph	3Ph	3Ph	3Ph	3Ph	3Ph	3Ph	3Ph	3Ph
1 HP .75 kW	8.8A	5.0A	4.2A	2.9A	2.4A	2.5A	2.1A	2A	1.7A
1.5 HP 1.1 kW	12.0A	6.9A	6.0A	4.2A	3.5A	3.6A	3.0A	N/A	N/A
2 HP 1.5 kW	13.3A	8.1A	7.0A	4.7A	4.0	4.1A	3.5A	3.2A	2.7A
	170-264 VAC 48-62 Hz	170-264 VAC 48-62 Hz		340-440 VAC 48-62 Hz		340-528 VAC 48-62 Hz		425-660 VAC 48-62 Hz	

The above values are full-load current values.

© 2014 Envira-North Systems Ltd

Wire Location

- DO NOT RUN input and output power cables in the same conduit.
- DO NOT RUN control cables with any power cables in the same conduit.
- DO NOT RUN different fans output power cables in the same conduit.
- You can run different fans input power cables in the same conduit.

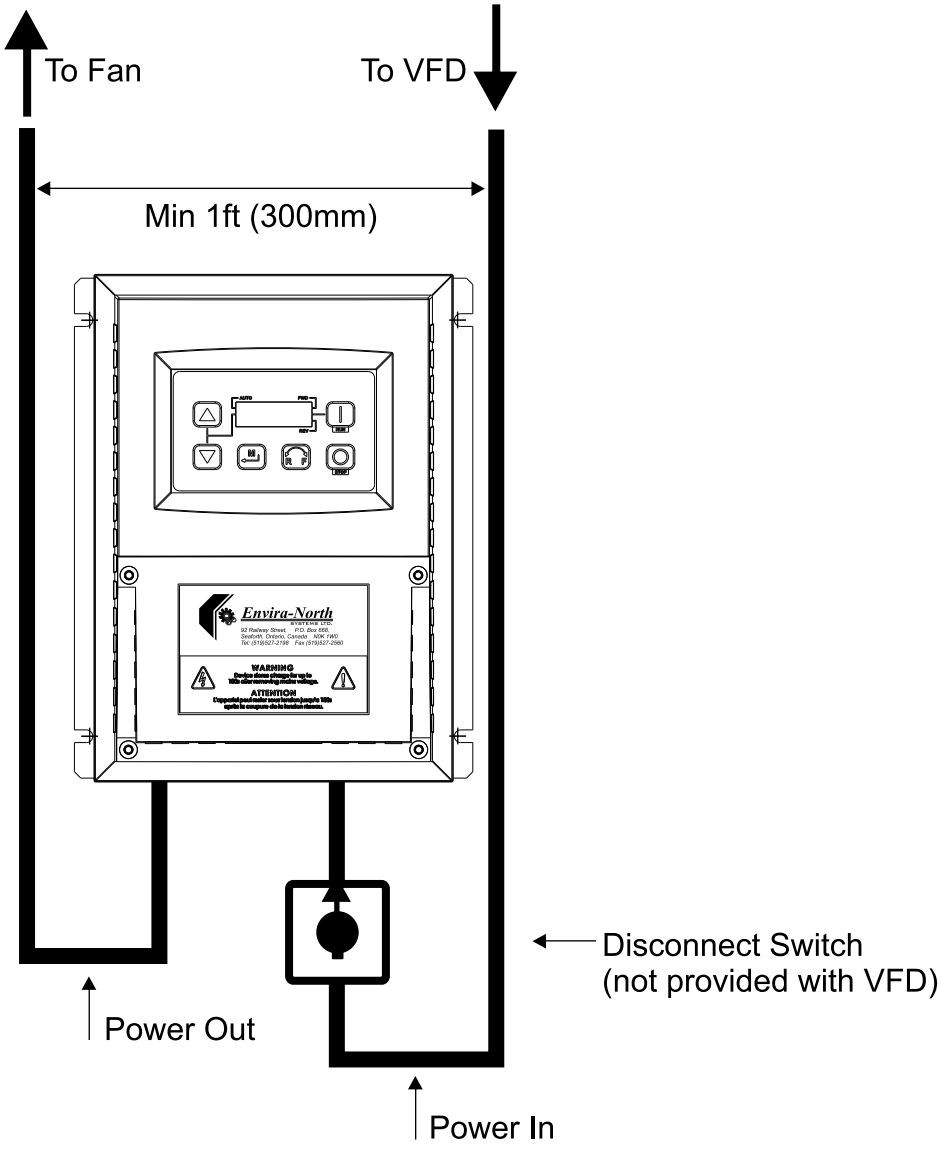

© 2014 Envira-North Systems Ltd

Wire Connections (VFD)

Input Power

- 1 Ph use L1 – L2 + PE (Ground)
- or 3 Ph use L1 – L2 – L3 + PE (Ground)

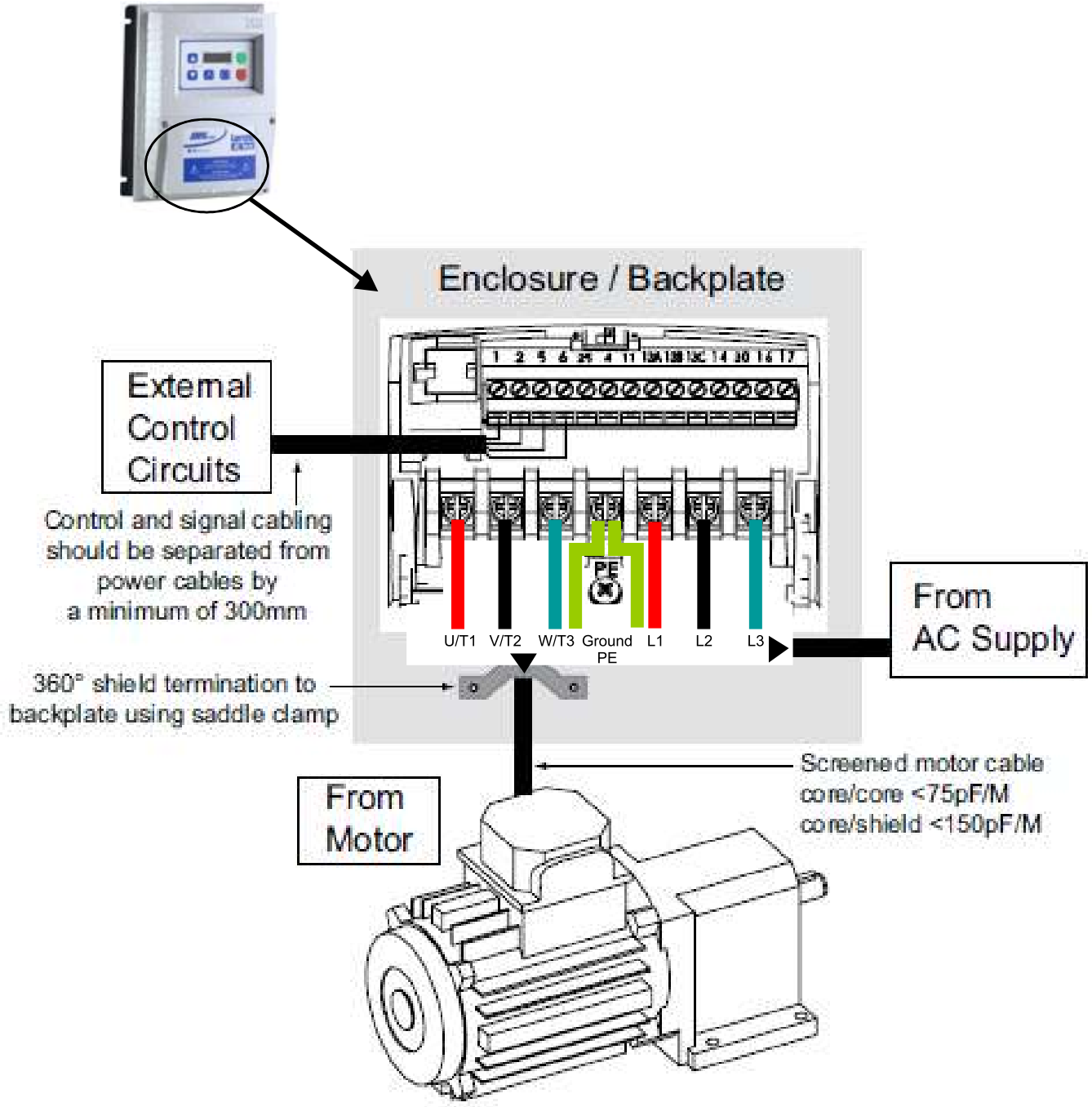

© 2014 Envira-North Systems Ltd

Wire Connections (Motor)

Nord Motor

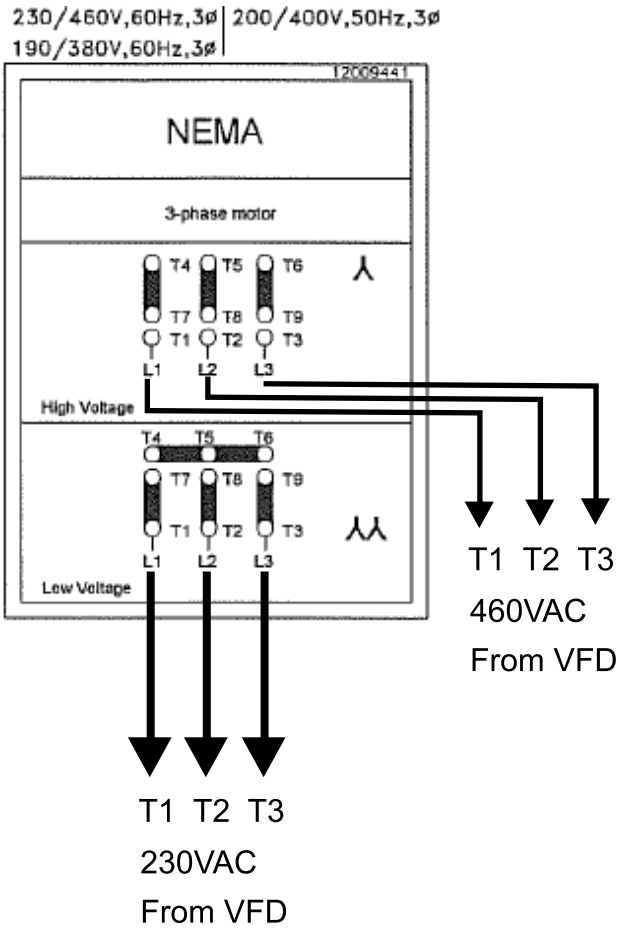

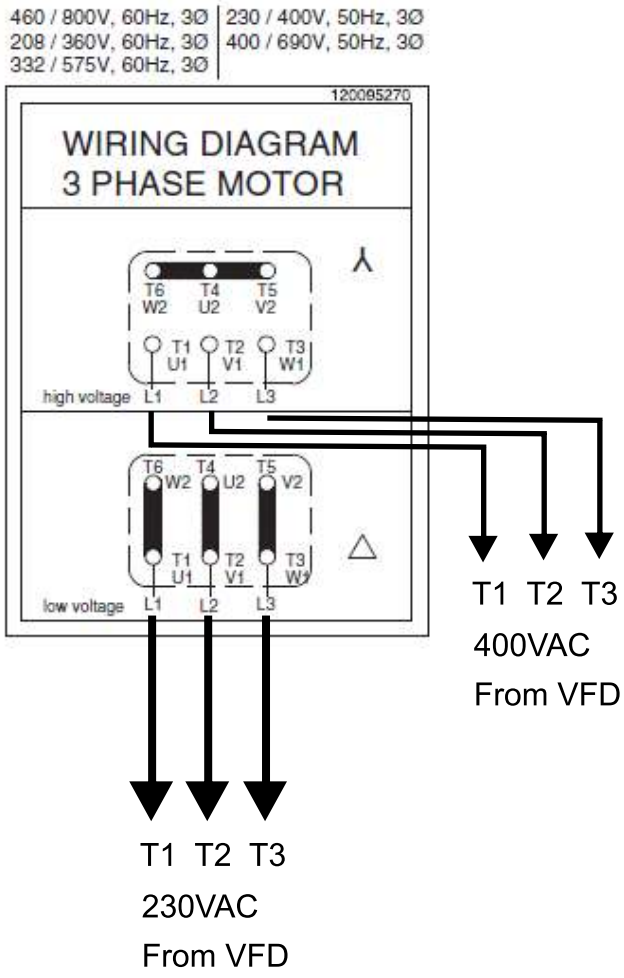

© 2014 Envira-North Systems Ltd

Wire Connections (VFD to LVC &TFD-1)

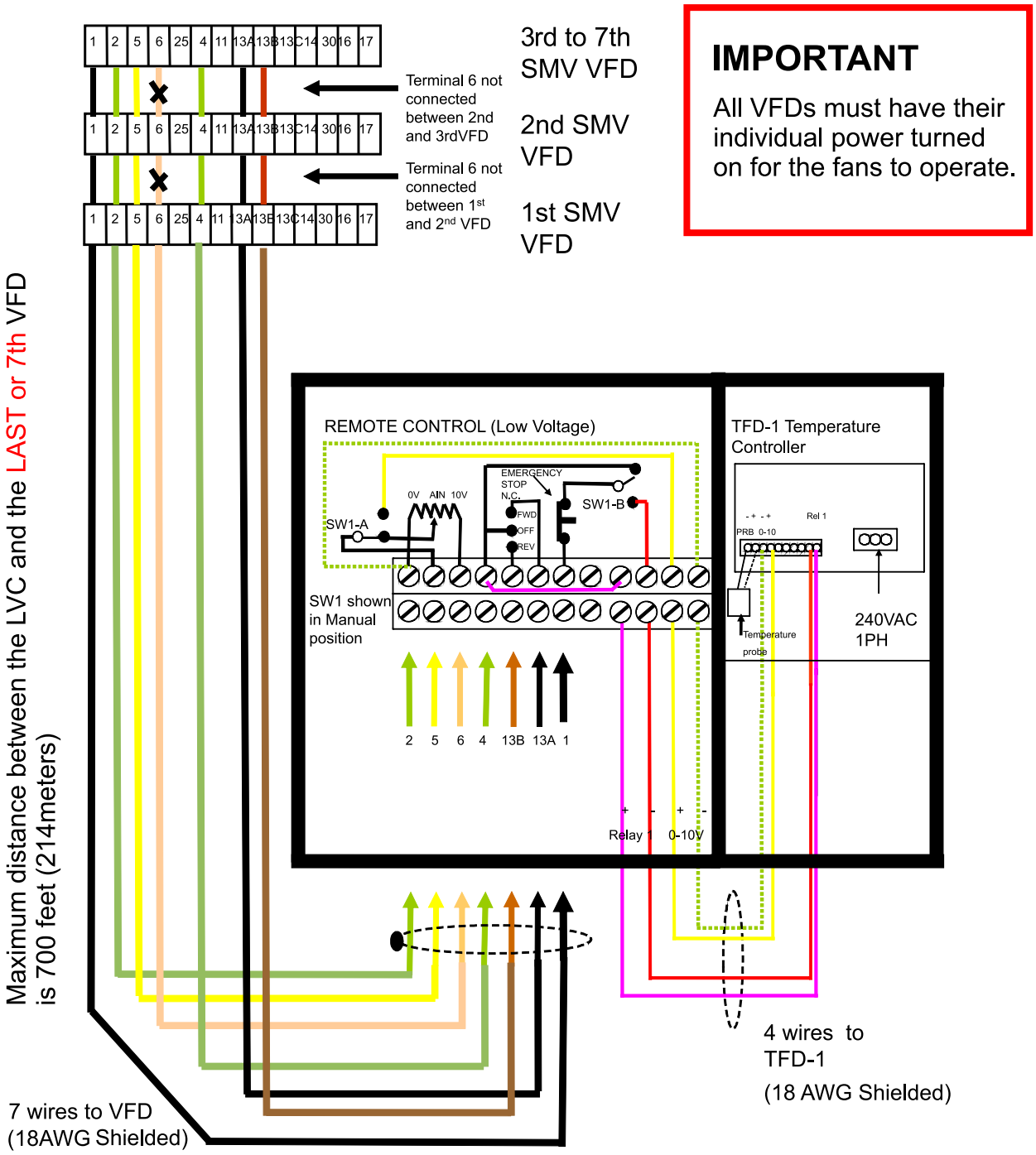

Operation Instructions of the VFD Without the LVC

(These instructions will not work if the LVC is installed, see next page)

To Start:

Press the

To Stop:

Press the

To Change Speed:

Press the 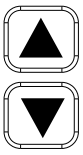

To Change Rotation:

Press the

Then press

within 4 seconds to confirm the change.

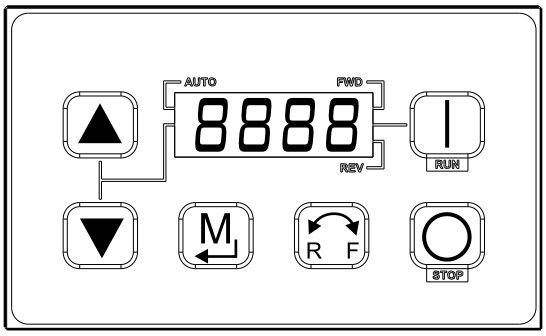

© 2014 Envira-North Systems Ltd

Operation Instructions On Low Voltage Controller And TFD-1 Temperature Controller

- DO NOT TURN OFF THE FAN WHILE IN MOTION USING THE DISCONNECT SWITCH.
- Make sure the “TFD-1/Manual” switch is the “TFD-1” position to control automatically the speed of the fans in the temperature mode.
- In the “Manual” mode, use the speed potentiometer to adjust the fan’s speed.
- Always use the RED STOP button (on the right of the Low Voltage Controller) to turn off or stop the fan.
- To reverse or forward the direction of the fan while in motion, change the direction using the “forward/reverse” switch.

Setup of TFD-1 Temperature Controller

- To adjust the TFD-1:
    - Rotate Selector dial to position (1) Set point
    - Rotate the Adjustor dial to desired set point temperature. Example 20°C
    - Rotate Selector dial to position (2) Modulation band
    - Rotate the Adjustor dial to desired modulation band. Example 10°C
    - Rotate Selector dial to position (3) Minimum ventilation off
    - Rotate the Adjustor dial to desired minimum. Example 5°C

In the example above, from start-up the fan will start to turn only if the interior building temperature reaches 20°C. The speed that will be indicated on the fan controller should be approximately 15Hz or 27%. As the temperature rises in the building the fan will increase speed until the temperature reaches the end of the modulation band. At 30°C (set point + modulation band) the fan will be at its maximum (60Hz or 100% on the fan controller).

- As the temperature decreases the speed will decrease until you reach the set point (20°C). At that point the speed will be at its minimum.
- As the temperature decreases below the set point, the fan will continue to operate at its minimum rate until you reach 15°C (set point minus the minimum ventilation off).
- Below this point of 15°C the fan will stop and will stay in the off condition until the temperature rises to the set point – minimum off (15°C) and then the cycle repeats itself.

The minimum speed has been programmed to 15 Hz or 27%. DO NOT lower it pass this limit otherwise your warranty will be void. Lowering the speed below 15 Hz or 27% will cause the motor to overheat because the motor will not draw enough air to cool down at these low speeds.

© 2014 Envira-North Systems Ltd

Wire Connections for Manual Fan Control with AC Tech SMV & Tri-Star

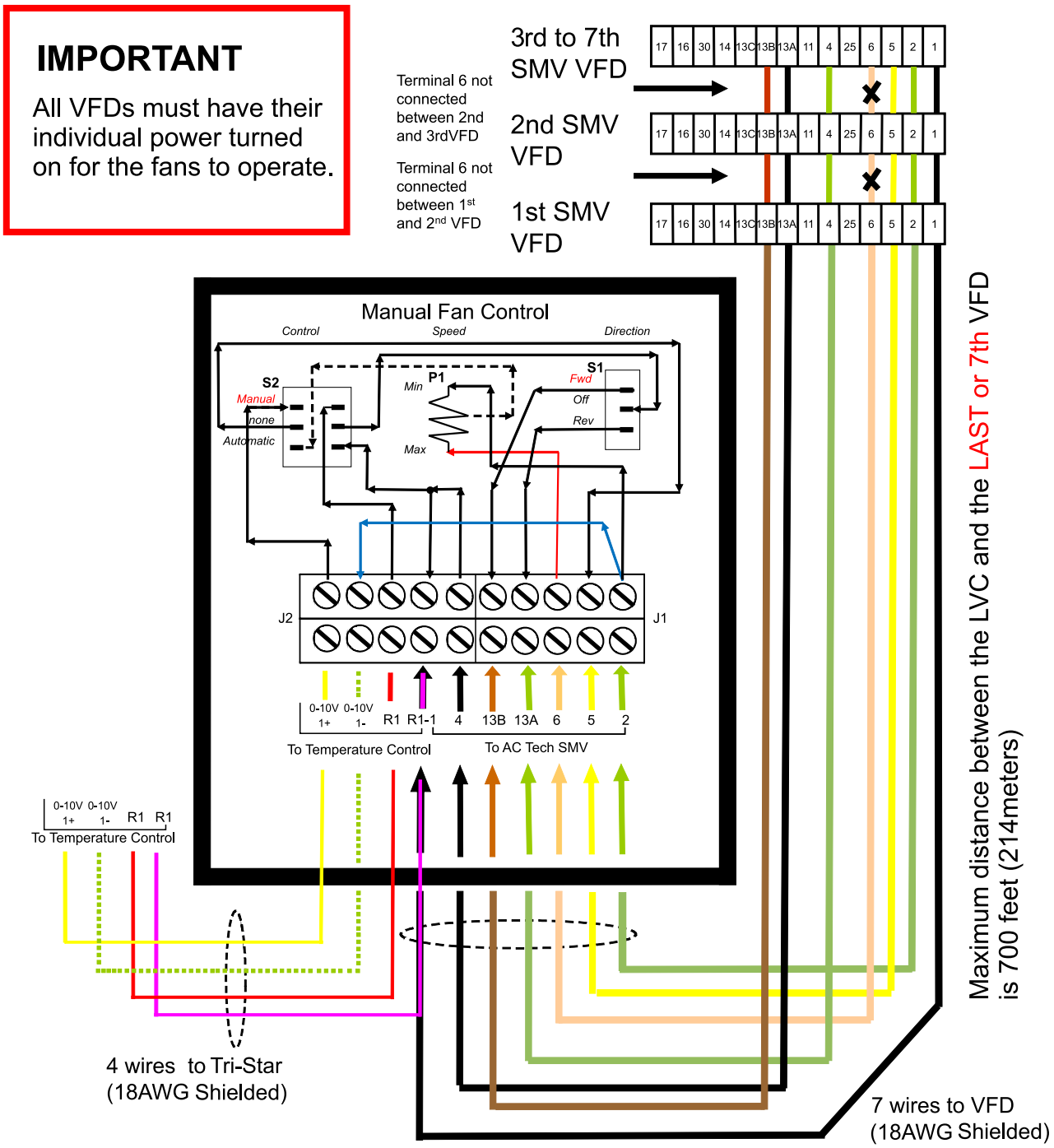

© 2014 Envira-North Systems Ltd

Operation Instructions for Manual Fan Control with AC Tech SMV & Tri-Star

- DO NOT TURN OFF THE FAN WHILE IN MOTION USING THE DISCONNECT SWITCH.
- Make sure the AUTOMATIC/MANUAL switch is the AUTOMATIC position to control automatically the speed of the fans in the temperature mode.
- In the MANUAL mode, use the speed potentiometer to adjust the fan's speed.
- Always use the FWD/OFF/REV button (on the right of the Low Voltage Controller) to turn off or stop the fan.
- To reverse or forward the direction of the fan while in motion, change the direction using the FWD/OFF/REV switch.
- For setup of the Expert Tri-Star Temperature Controller see the Expert Tri-Star manual.